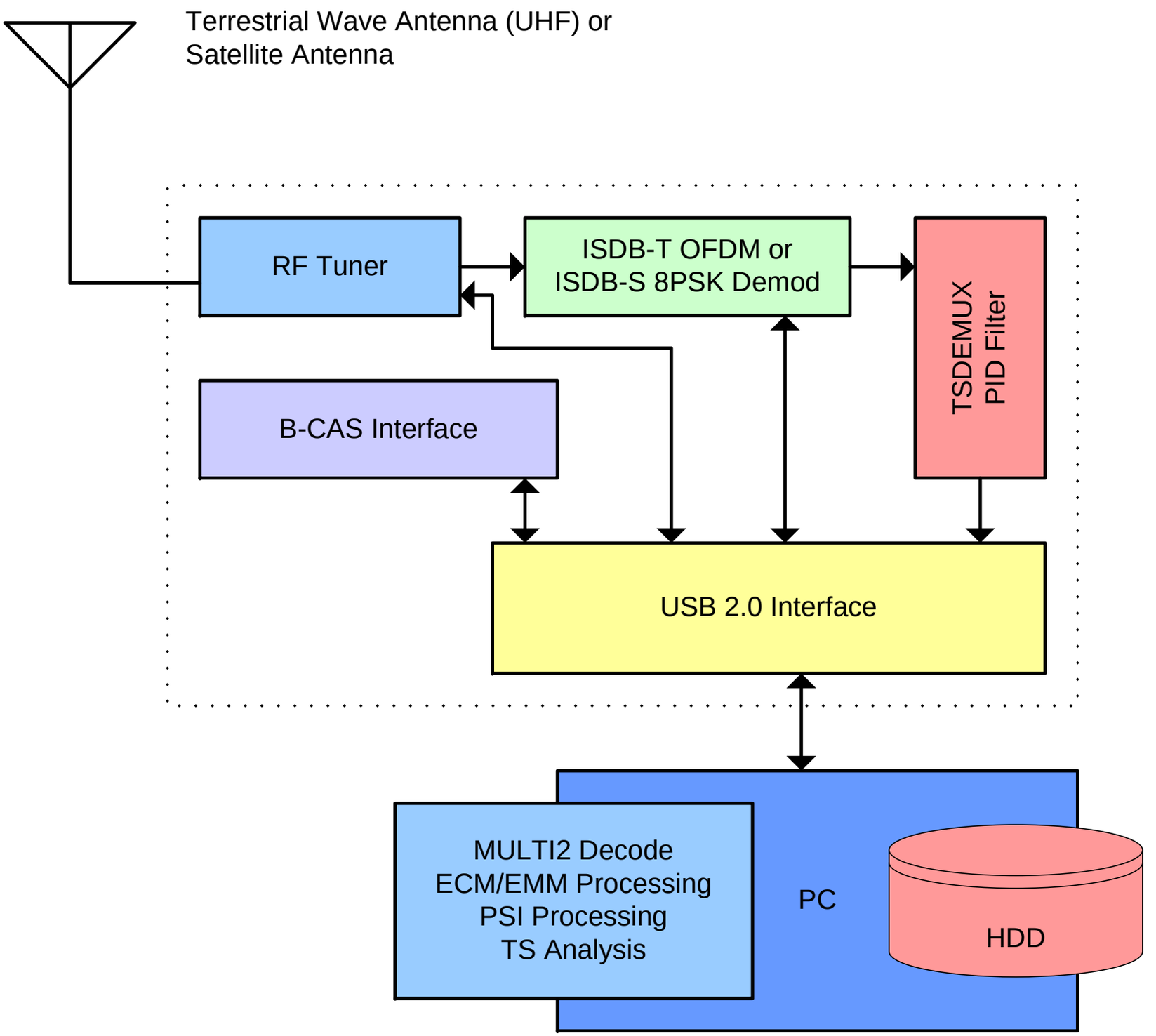
Terrestrial Wave Antenna (UHF) or
Satellite Antenna
RF Tuner
ISDB-T OFDM or
ISDB-S 8PSK Demod
TSDEMUX
PID Filter
B-CAS Interface
USB 2.0 Interface
MULTI2 Decode
ECM/EMM Processing
PSI Processing
TS Analysis
PC
HDD